SOLARTECH

WHERE SOLAR MEETS ART & TECHNOLOGY

Global PV Storage Insights

Average hybrid solar inverter price per 100kW in Mauritius

Overview

However, it is essential to recognize that your personalized estimate may vary depending on all the factors that need to be considered in order to provide you with the most suitable solar power solution tailored to your specific lifestyle.

However, it is essential to recognize that your personalized estimate may vary depending on all the factors that need to be considered in order to provide you with the most suitable solar power solution tailored to your specific lifestyle.

However, it is essential to recognize that your personalized estimate may vary depending on all the factors that need to be considered in order to provide you with the most suitable solar power solution tailored to your specific lifestyle. All our systems are quality products designed with an aim.

Return on Investment (ROI): Initial cost of purchasing and installing solar panels kept falling and falling resulting in a good ROI. Depending on factors like your location, energy usage, and incentives, solar panels can pay for themselves in a relatively short time through energy savings.

Call for pricing at (801) 566-5678. We guarantee best pricing for 50kW 440V rated voltage hybrid inverter. Order at Energetech Solar.

To meet the diverse needs of different users, Inverter.com Online Shop has prepared a series of hybrid solar inverters with rated power ranging from 3kW to 10kW, with detailed price lists. We invite you to visit our product pages to make it easier for you to select and purchase the inverter that.

PV power: 150kWp .

Based on your units average consumption per month and your monthly average electricity bill of Rs 1500 – Rs 2,500 the following solar power solutions may be convenient for you : All our systems are quality products designed with an aim to be amortised under 10years. Our actual average rate for our. Are solar panels a good investment in Mauritius?

Tax Incentives: In Mauritius MRA offers tax credits to encourage the adoption of solar energy. These incentives can help reduce the upfront cost of installing solar panels, making them more financially attractive. Low Maintenance: Solar panels are relatively low maintenance.

Are there integrated photovoltaics in Mauritius?

According to MARENA, there are currently no building integrated photovoltaics in Mauritius. Energy efficiency is now one of the main criteria in the design of public buildings and in rental of private buildings. The Green Building Council Mauritius was set up in 2009 to promote green building and is a member of World Green Building Council.

Where can I buy a 50kw 440V hybrid inverter?

Special Instructions?

Call for pricing at (801) 566-5678. We guarantee best pricing for 50kW 440V rated voltage hybrid inverter. Order at Energetech Solar.

How can I make Mauritius more eco-friendly?

By the way: CEB's Carbon footprint is still over 80% fossile so taking action yourself can help accelerate Mauritius to become more eco-friendly. This kit is ideal for small Mauritian households with 2 air-conditioning devices, refrigerator, washer and a water pump.

Average hybrid solar inverter price per 100kW in Mauritius

Solar Hybrid Inverters Price in Pakistan Updated September ...

Buy Solar Hybrid Inverters products online at the best price in Pakistan. Get genuine 2025 products like Inverex inverters, Tesla Infini, Stabimatic Inverter, Max Power Sunglow in ...

Top Hybrid Inverters Suppliers in Mauritius

In other words, all the hybrid solar inverters that we offer will undoubtedly have the ability to fulfill all your solar power needs. If you want to buy inverters for hybrid PV systems at low wholesale ...

DOMESTIC CEB SOLAR PV SCHEME FOR CUSTOMERS ...

For this phase of the Scheme in Mauritius, a total cumulated capacity of ten (10) megawatts (MW) has been allocated. Applications received after the allocated 10 MW capacity for the scheme ...

Hybrid Solar Inverter Price List

To meet the diverse needs of different users, Inverter Online Shop has prepared a series of hybrid solar inverters with rated power ranging from 3kW to 10kW, with detailed price lists.

Hybrid inverters One/Dual MPPT Trackers Hybrid Solar Inverter ...

Shop Hybrid inverters One/Dual MPPT Trackers Hybrid Solar Inverter 3KW 3.6KW 4.2KW 5KW 6KW 8KW 220V Pure Sine Wave Inverter with BMS Max PV 600V (Color : 4.2KW 2 MPPT ...

Hybrid Solar Inverter Price List

To meet the diverse needs of different users, Inverter Online Shop has prepared a series of hybrid solar inverters with rated power ranging from 3kW to 10kW, with detailed price lists. We invite you to visit our ...

Hybrid Photovoltaic System & Panel , Grid & Off Grid ...

Looking for solar power solutions & panels? Reneworld is the best choice. We provide hybrid, grid & off-grid photovoltaic systems, as well as EV systems. Call us!

Photovoltaic System

Fire Rated in accordance with Latest Australian Standards Enphase Micro-Inverters: At the heart of Enphase system is a powerful technology. Solar panels may be on top, but it's the inverter that does all the real work. Choosing an ...

Solar Inverter Price In Pakistan 2025 (Updated)

Solar Inverters 2025 The solar inverter price in Pakistan varies depending on factors such as brand, capacity, features, and quality. On average, solar inverter prices can range from PKR 60000 to 1800000 for residential and commercial ...

The Complete Off Grid Solar System Sizing Calculator

An off-grid solar system's size depends on factors such as your daily energy consumption, local sunlight availability, chosen equipment, the appliances that you're trying to ...

Solar Center Mauritius

The Design Office of SOLAR CENTER MAURITIUS guarantees all its calculations with an annual average of 5 hours of solar electricity production per day, i.e. 1800 hours per year.

Solar inverter prices

Solar inverter prices - Updated July 2025 Hybrid inverters can connect solar panels AND a battery. All hybrid prices below include the inverter's consumption meter. All inverters include a WIFI dongle. MPPTs refers to how many ...

100kW Solar System Price - On grid, Off grid and Hybrid

100kW Solar system cost in India. Buy 100kW On-grid, Off-grid and Hybrid solar systems at best price with subsidy and battery backup.

Hybrid pure sine wave inverter in Mauritius

Solar inverter chargers are a product of particular popularity throughout Mauritius because of the plentiful amount of solar energy that can be harvested in the area and the fact that it's two products in one (a solar charge ...

Hybrid Solar Inverter

Hybrid Solar Inverter - Buy Hybrid Solar Inverter Online at India's Best Online Shopping Store. Check Hybrid Solar Inverter Prices, Ratings & Reviews at Flipkart . Free Shipping Cash on Delivery Best Offers

100kW Solar System: Price, Load Capacity, How Big, ...

How Much Will a 100kW Solar System Save? Installing a 100kW solar system can lead to significant cost savings over time. On average, a 100kW solar system can save up to $31,025 per year. Over the 25-year lifetime of the ...

Solar PV Inverter Cost Breakdown: Types and Prices

Get a clear overview of Solar PV Inverter costs, covering string, micro, and hybrid inverters. Find out how different factors impact prices and help you choose the best ...

Wholesale Solar Inverter from Supplier , Mauritius

We are a Solar Inverter supplier serving the Mauritius, mainly engaged in the sale, quotation, and technical support services of various Solar Inverter products in the Mauritius region.

100KW 150KW 200KW 250KW 300KW 400KW ...

Specifications of 100KW 150KW 200KW 250KW 300KW 400KW 500KW Hybrid Solar Inverter The 100KW 150KW 200KW 250KW 300KW 400KW 500KW Hybrid solar inverter is designed for medium and large commercial and industrial ...

100kW Solar PV System , Fronius

This 100kW Fronius solar system is aimed at the medium to large commercial sector and takes advantage of the maximum discount available under the Small Scale Technology Certificate scheme.

100 kW Solar Kits

Compare price and performance of the Top Brands to find the best 100 kW solar system. Buy the lowest cost 100kW solar kit priced from $0.95 to $1.25 per watt with the latest, most powerful solar panels, module optimizers, or micro-inverters.

Solar Installed System Cost Analysis , Solar Market ...

Solar Installed System Cost Analysis NREL analyzes the total costs associated with installing photovoltaic (PV) systems for residential rooftop, commercial rooftop, and utility-scale ground-mount systems. This work has ...

Fusion 100kW On Grid Solar Inverter Online at Lowest ...

Buy Fusion 100 kw On Grid Solar Inverter - Loom Solar offers complete range of solar Grid tied inverter with Fusion 100 KW PCU. It has inbuilt Remote monitoring, WI-FI connectivity and Powerful MPPT Controller. Loom Solar Provides Free ...

Solar inverter prices

Solar inverter prices - Updated July 2025 Hybrid inverters can connect solar panels AND a battery. All hybrid prices below include the inverter's consumption meter. All inverters include a ...

Hybrid Inverter Comparison Table

Review hybrid inverter prices and specifications with our regularly updated comparison table. Find the best hybrid solar inverter for your battery needs.

Solaire Mauritius

Solar panels generate electricity from sunlight, reducing reliance on grid electricity. Over time, this can lead to significant savings on your utility bills and makes you worry less about rising oil and ...

Solar Inverter Price in Pakistan Updated September 2025

Best Solar Inverter Price in PakistanDiscover reliable solar energy solutions with top solar inverters and UPS systems designed for both residential and commercial needs in Pakistan. ...

50 kW Solar Panel System Price in India in 2025 , Explore ROI ...

The 50 kW solar panel system price in India depends on several factors, including your DISCOM charges, panel type, inverter type, mounting structure height, type of ...

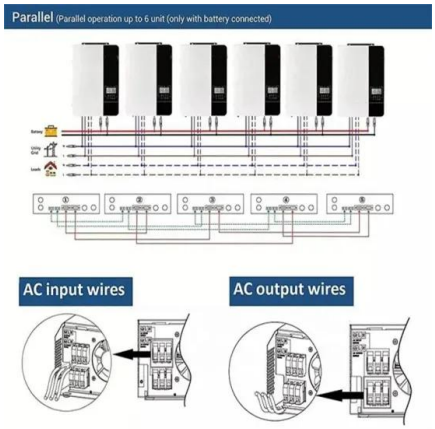

Contact Us

For catalog requests, pricing, or partnerships, please visit: https://naturesnursery.co.za