SOLARTECH

Global PV Storage Insights

Government procurement price of warehouse solar storage in Azerbaijan

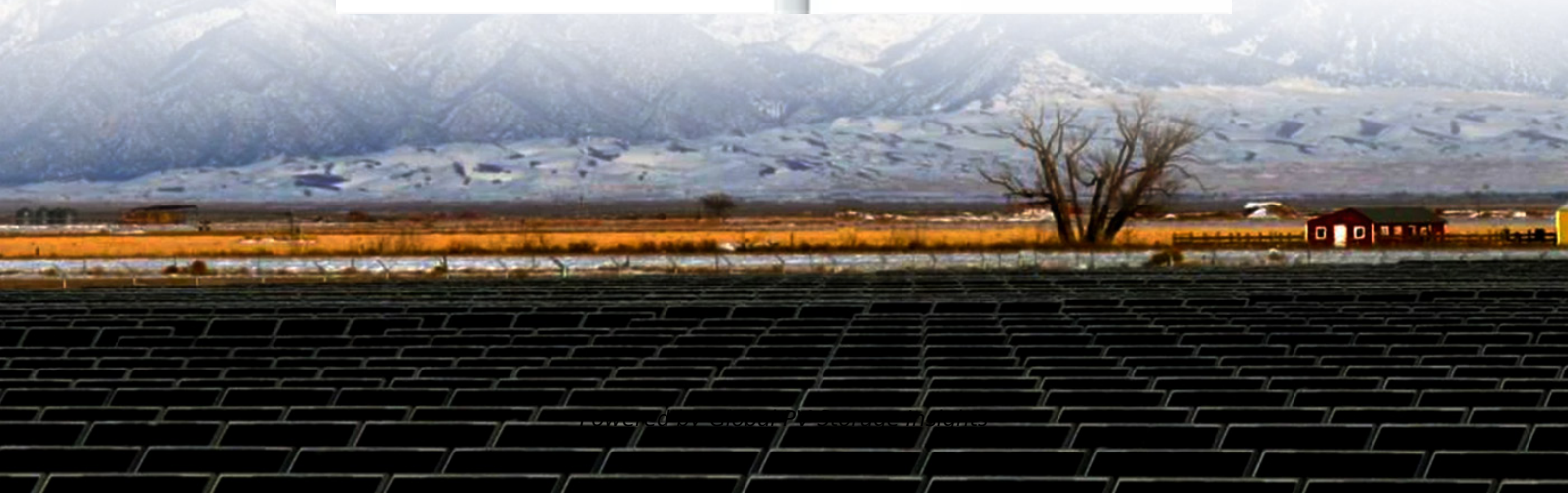

Government procurement price of warehouse solar storage in Azerb

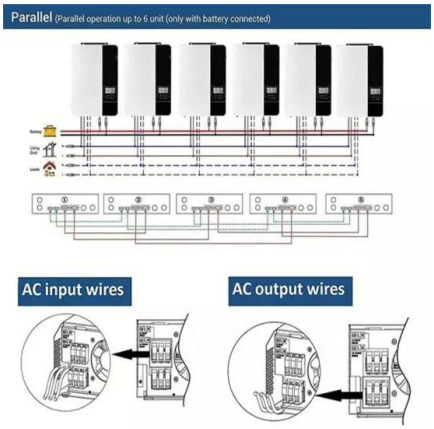

Energy Storage RFP, bids and Government Contracts

3 ???· Energy Storage Bids and RFPs Latest Energy Storage RFPs, bids and solicitations. Bid on readily available Energy Storage contracts with the best and most comprehensive ...

Azerbaijan air energy storage equipment

Azerbaijan government signs MoU on battery Power plant developer ACWA Power and the government of Azerbaijan have signed an agreement to potentially deploy a battery energy ...

Latest Azerbaijan Electrical Tenders

What Electrical products does the Azerbaijan government buy? The Azerbaijani government procures a wide range of energy, power, and electrical products and services, including: ...

Azerbaijan Solar Tenders, Bids and RFP

Latest Azerbaijan Solar Tenders, Government Bids, RFP and other public procurement notices related to Solar from Azerbaijan. Users can register and get updated information on

Azerbaijan ...

PH Launches Green Energy Auction 4, Pioneering ...

The Philippine government has officially launched the fourth round of its Green Energy Auction (GEA-4), announced today by the Department of Energy (DOE). This auction introduces a groundbreaking feature: the ...

Azerbaijan And China Sign Six Docs on Construction of New ...

Azerbaijan and China have reached agreement on the construction of new solar and wind power plants in Azerbaijan and a battery energy storage system, the Azertag state ...

Azerbaijan Solar Energy Government & Private Solar Energy Bids

Explore the latest Azerbaijan Solar Energy Tenders and gain access to real-time government bids, eProcurement updates, and detailed information on government contracts in Azerbaijan. ...

Latest Azerbaijan Renewable Energy Tenders

Azerbaijan government Renewable Energy Procurement The Azerbaijani government is committed to promoting renewable energy development and has set a target of increasing the ...

Azerbaijan Battery Energy Storage Cabinet Tender Announcement

Azerbaijan government signs MoU on battery storage ... Power plant developer ACWA Power and the government of Azerbaijan have signed an agreement to potentially deploy a battery ...

Projects from Azerbaijan, Azerbaijan Projects, Azerbaijan Projects

Azerbaijan Project Tenders - Get 100% accurate Project Details and Projects information in Azerbaijan along with Public Tenders, International Bidding opportunities, and more. ...

Azerbaijan: Picking up pace of green energy initiative

Azerbaijan has launched the country's biggest renewable energy investment project to date: the construction of two solar plants and a wind power plant. It marks a major ...

Azerbaijan solar energy storage system

Considering solar panels and energy storage? Find out the basics of solar PV and home batteries, including the the price of the products on sale from Eon, Ikea, Nissan, Samsung, Tesla and ...

Azerbaijan launches first renewables auction

In line with the country's green agenda, the EBRD has supported the authorities in developing the necessary legal and regulatory framework for introducing competetive procurement for renewable energy, for ...

Azerbaijan Energy Storage Electricity Price List Trends Market ...

Curious about energy storage costs in Azerbaijan? This guide breaks down electricity pricing trends, key project data, and how renewable energy integration impacts the market.

Navigating The Battery Storage Boom

Around the world, countries large and small have set goals, legislation, and financial incentives to transition towards decarbonized societies and economies in the so ...

Purchase of Warehouse Services Tender, Azerbaijan

Azerbaijan government tender for Purchase of Warehouse Services, TOT Ref No: 119137804, Tender Ref No: 111241, Deadline: 19th Jun 2025, Register to view latest Online Global ...

Borrego launches solar + storage product ...

EPC and O& M provider Borrego has launched Anza, a new solar and battery storage procurement marketplace and optimization solution. The proprietary technology engine behind the Anza digital marketplace is a cost ...

Azerbaijan Tenders , Latest Azerbaijan Tender ...

How to find Azerbaijan tenders? The primary official source for Azerbaijan government procurement is the Electronic Procurement Portal (e-tenders.gov.az), managed by the Ministry of Economy of the Republic of ...

Azerbaijan Cold Storage Government & Private Cold Storage ...

Explore the latest Azerbaijan Cold Storage Tenders and gain access to real-time government bids, eProcurement updates, and detailed information on government contracts in Azerbaijan. ...

Azerbaijan Tenders - Azerbaijan Government tenders, ...

Azerbaijan Tenders -Find Live Business Contracts for your Product and Services in Azerbaijan invited by multiple Procurement Agencies from Azerbaijan through eTendering, eProcurment, ...

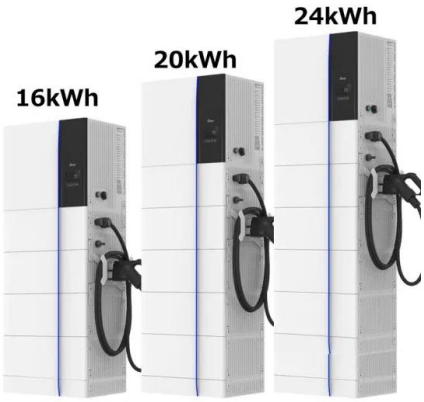

Law On Public Procurement, Azerbaijan

The Law determines economic, legal and organizational basis of public procurements in the Republic of Azerbaijan, sets principles and rules of effective and ...

Government of Azerbaijan Tenders

Discover 3976+ Azerbaijan Government tenders - Get latest tenders, RFP, eProcurement from government of Azerbaijan. Explore opportunities and start bidding now.

BIDDING DOCUMENT

This Bidding Document for Procurement of Plant - Design, Supply, and Installation, has been prepared by School Education and Literacy Department, Government of Sindh and is based on ...

? Solar Sector Pricing, Transport & Storage Trends , PVO

Procurement Update: Price Trends, Storage, and Transport in the Solar Sector In recent months, the solar energy sector has experienced significant shifts. Erwin Damen, Chief Procurement ...

THE LAW OF THE REPUBLIC OF AZERBAIJAN ON ...

estimated price of goods (works and services) - average market price of goods (works and services), established by the procuring entity before the tender is released in accordance with ...

Azerbaijan Energy Storage Electricity Price List Trends Market ...

Why Azerbaijan's Energy Storage Market Matters Azerbaijan's push toward renewable energy integration has turned energy storage into a hot topic. With solar and wind projects expanding ...

WeCooling Cold Storage Azerbaijan

I'm pleased to share that we've completed the structural phase of a cold storage warehouse in Zaqatala, one of Azerbaijan's most productive regions for fruits and hazelnuts. ? Land area: 0.5

Tariffs (Prices) , AERA

Heat supply tariffs (December 29, 2024) By Decision No. 17 of the Tariff (Price) Council of the Republic of Azerbaijan, dated December 29, 2024, the tariffs for the heat supplied by ...

Solar Manufacturing in Azerbaijan: Your Supply Chain ...

This guide provides a practical framework for navigating the core components of a solar manufacturing supply chain in Azerbaijan, exploring everything from raw material sourcing and logistics to regulatory incentives ...

Azerbaijan Renewable Energy Tenders, Bids and RFP

Latest Azerbaijan Renewable Energy Tenders, Government Bids, RFP and other public procurement notices related to Renewable Energy from Azerbaijan. Users can ...

Azerbaijan Solar Power Government & Private Solar Power Bids Azerbaijan

Explore the latest Azerbaijan Solar Power Tenders and gain access to real-time government bids, eProcurement updates, and detailed information on government contracts in Azerbaijan. Stay ...

Contact Us

For catalog requests, pricing, or partnerships, please visit:
https://naturesnursery.co.za